AIR FORCE OFFICE of SCIENTIFIC RESEARCH [AFOSR]
Manager of the Basic Research Investment for the Air Force

Research HIGHLIGHTS

JUN JUL AUG 03

Scientists develop a system for implementing real-time mission planning and execution

The days of military commanders marching off to war armed with binoculars and a walkie-talkie will go the way of the Dodo, if Dr. Eugene Santos has his way.

Santos, an Air Force Office of Scientific Research (AFOSR)-funded professor of computer science and engineering at the University of Connecticut, proposes sending today's leaders to the front with a field-savvy PalmPilot-like handheld device loaded with advanced logistics system software developed by his research team. The Multi-Agent Distributed Goal Satisfaction (MADGS) device, a Java™-based, mobile-agent system, could help ease the burden of planning and executing a large-scale mission.

Armed with MADGS, leaders no longer have to worry about equipment/supplies sent to the wrong location – a factor in determining the success or failure of a mission. Santos and his team have been developing a sophisticated system that fully understands how to retrieve, analyze, synthesize, and disseminate information to commanders on and off the battlefield. MADGS also factors in incomplete or uncertain information and addresses working with a large number of people, limited resources, external influences, and nearly every other conceivable obstacle.

In developing software versatile enough for a general in battle or a mayor responding to a terrorist attack, Santos formed a union of five components: Agent-Server (Carolina), mobile-agents, Distributed Goal Satisfaction (DGS), agentTool, and PRODIGY.® Santos built the MADGS system based on an in-depth examination of the responsibilities placed upon agents and servers. To make it work, Santos' team injected mobile-agents into the system through the agentTool to help the user analyze missions that require complex planning and execution. The DGS module provides users resource alternatives to the PRODIGY-constructed master plan.

continued on page 2...

BELOW: The Multi-Agent Distributed Goal Satisfaction (MADGS) device could assist in planning and executing large scale missions.

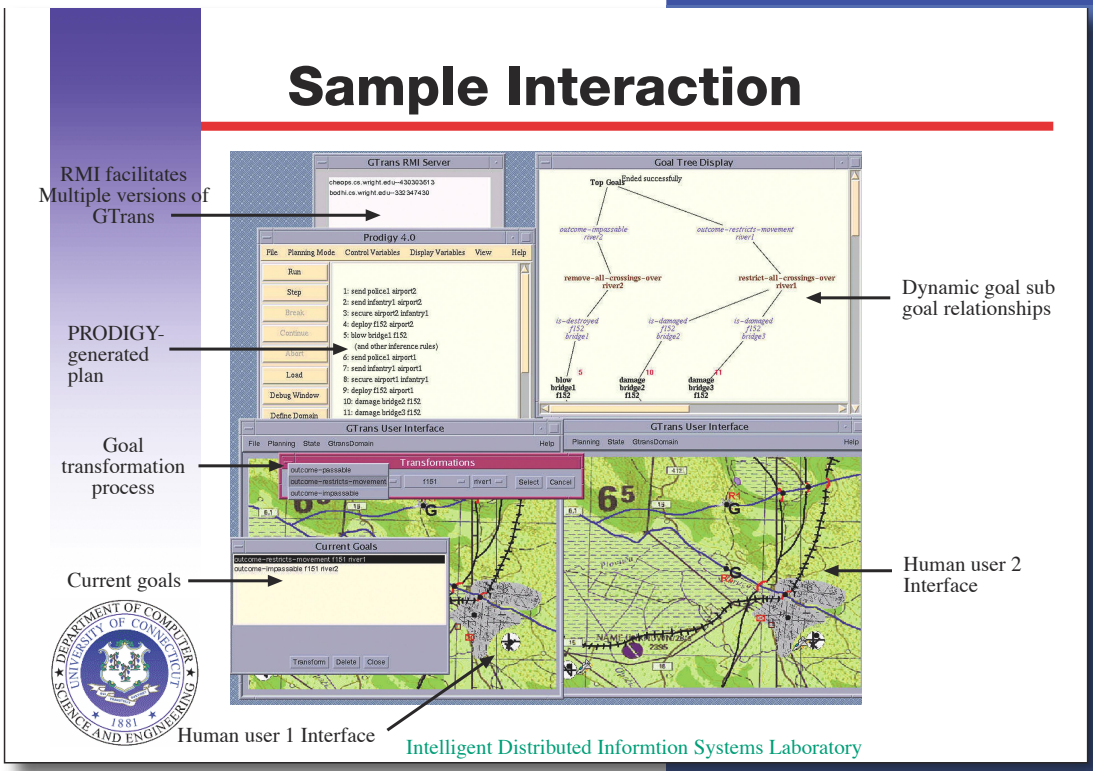

Scientists develop a system for implementing real-time mission planning and execution

continued from page 1...

While MADGS has proven itself effective in small-scale tests, Santos intends to scrutinize his system in a larger setting later this year. If initial readings are any indication, future leaders should expect to leave their binoculars at home.

Santos leads a team of scientists across several information technology fields that includes Dr. Alexander Shvartsman and Dr. Steven Demurjian, at the University of Connecticut; Dr. Scott Deloach, at Kansas State University; and Dr. Michael Cox, at Wright State University. AFOSR's Mathematics and Space Sciences Directorate sponsors this team of researchers.

Dr. Robert Herklotz, AFOSR/NM

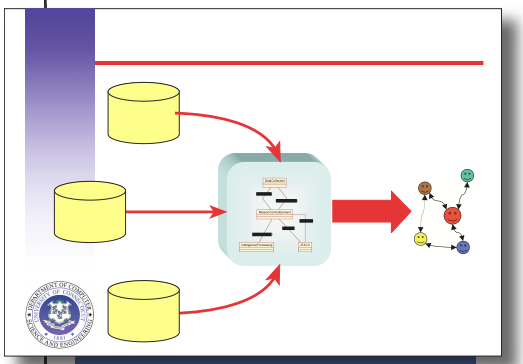

The MADGS is formed of five software components such as these to help users analyze a given situation.

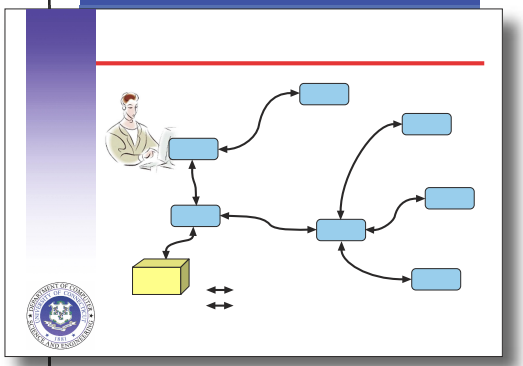

Researchers take different approaches to holographic recording and storage

Identifying enemy aircraft and missile threats may become easier thanks to the efforts of two Air Force Office of Scientific Research (AFOSR)-funded scientists. Working on related but separate projects, Professors Demetri Psaltis and Selim Shahriar discovered different methods of improving digital signal processing (DSP) through holography.

Prof. Demetri Psaltis teamed with fellow California Institute of Technology Electrical Engineering Professors Zhiwen Liu and Gregory Steckman to develop a holographic system that records fast events on the nanosecond scale. Using shorter pulses and generating the signal beam pulse train through wavefront division or nonlinear optics can extend their technique. The resulting performance is comparable to the current state of the art of a multi-camera system.

Prof. Selim Shahriar and fellow researchers at Northwestern University joined scientists at the Massachusetts Institute of Technology and Digital Optical Technologies in Somerville, Massachusetts, to improve DSP speeds by orders of magnitude using a simple holographic optical corrrelator. "Holography allows you to do the search in parallel fashion," Prof. Shahriar said in a recent interview with *Laser Focus World*." If you are trying to track and identify an enemy plane, it could appear at different distances and in different orientations, so you may need 10,000 pictures in the database for all the possible orientations of just one plane."

In simplest terms, Prof. Shahriar's approach deals with massive storage for image-processing applications, such as satellite pictures, while Prof. Psaltis' approach looks at recording extremely fast events. Hence, an issue of storage capacity versus speed. While Professors Psaltis' and Shahriar's holographic methods have obvious military applications, their research may also benefit biologically-based identification processes such as fingerprinting or comparison of dental images. AFOSR's Physics and Electronics Directorate is supporting Professors Psaltis' and Shahriar's research.

Dr. Gernot Pomrenke, AFOSR/NE

HOLOGRAPHIC SUPER CORRELATOR: BASIC CONCEPT

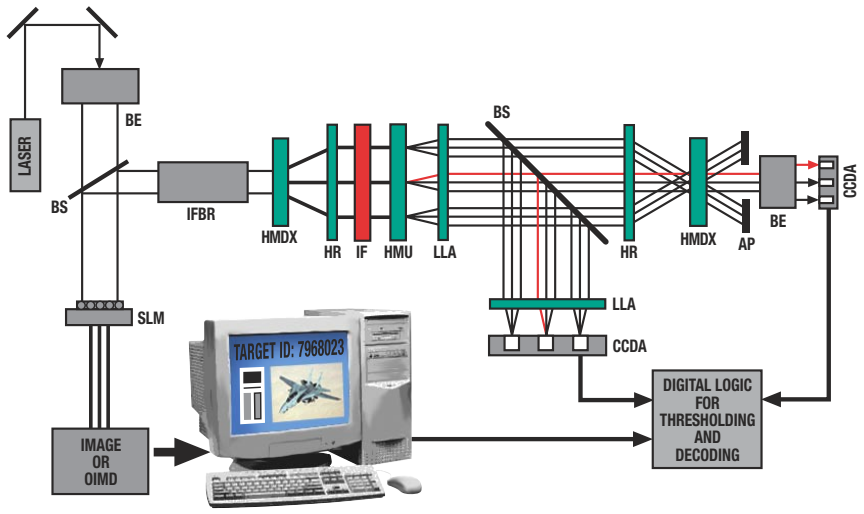

ILLUSTRATION KEY

AP: Aperture
BE: Beam Expander
BS: Beam Splitter
CCDA: CCD Array
HMDX: Holographic Mux/Demux
HMU: Holographic Mem Unit
HR: Holographic Redirector
HMU: Holographic Memory Unit
IFBR: Image Flattening Beam Reducer
LLA: Lenslet Array
OIMD: Objective/Image Mapping Data
SLM: Spatial Light Modulator
IF: Image Flattener

Junior Science Symposium

Maj. Gen. Paul D. Nielsen, Air Force Research Laboratory commander, was the guest speaker at the JSHS. Nielsen is shown here with Lt. Col. James D. Thorne, AFOSR Deputy Site commander.

Some of this nation's finest young minds met at the US Air Force Academy in Colorado Springs, Colo. to celebrate their achievements at the 41st National Junior Science and Humanities Symposium (JSHS).

The annual JSHS event that recognizes the next generation of scientists, engineers and mathematicians is funded by the Air Force Office of Scientific Research and a host of other military and academic sponsors.

Since JSHS's inception in 1958, the military has sponsored the program in order to promote research and experimentation in the sciences, mathematics, and engineering at the high school level. The program also seeks to recognize the significance of research in human affairs, and the importance of humane and ethical principles in the application of research results. By recognizing the accomplishments of talented youths and teachers at the symposia, the program hopes to encourage their continued interest and participation in the sciences, mathematics, and engineering. Those research-oriented students can also expand their horizons by being exposed to opportunities in the academic, industrial and governmental communities. This had led to an increase in the number of adults capable of conducting research and development.

JSHS Winners

Parmita P. Dalal of Lenexa, Kans.; Christina N. Hobson of Mesa, Ariz.; Brian Camley of Colorado Springs, Colo.; Ross Lang of Yardley, Pa.; James Y. Zou of Columbus, Ohio; Arun P. Thottumkara of Macomb, Ill.; Irene Y. Sun of Indianapolis, Ind.; Carolyn M. Tewksbury of Clinton, N.Y.

Featured at each regional and national symposium, students are invited to share their research presentations in the sciences, engineering, or mathematics. Participating students and teachers also interact with their peers and with practicing researchers, visit research and development laboratories, hear presentations on current research topics, and hear addresses by renowned scientists and engineers.

There are significant rewards for those who reach the national symposium. Awarded to each of eight 1st place finalists in the national research paper competition are $16,000 scholarships; to eight 2nd place finalists, $6,000 scholarships; and to eight 3rd place finalists, $2,000 scholarships. In addition, an expense-paid trip to the London International Youth Science Forum is awarded to each of the eight 1st place national finalists.

NCAR 56

NATIONAL CONFERENCE ON THE ADVANCEMENT OF RESEARCH

FROM TECHNOLOGY BREAKTHROUGHS TO TECHNOLOGY REVOLUTIONS

Monday-Thursday October 13-16, 2003

A CONFERENCE DESIGNED FOR THE SENIOR R&D MANAGER

Since 1947, senior R&D managers, like yourself, have attended the National Conference on the Advancement of Research to network, discuss issues, learn, and share experiences. This fall you have another opportunity to interact with fellow decision makers from the academic, government, industrial, and R&D associate sectors. The event consists of informative panel sessions, technical tours, renowned keynote speakers, social events, and a tutorial on "Technical Leadership for the 21st Century."

Dayton, Ohio–the birthplace of aviation–is the location for this year's conference. Dayton is the place to be in 2003, as this year marks the 100th anniversary of flight.

Conference Location: Dayton Convention Center **Accommodations:** Crowne Plaza Dayton

To learn more about NCAR 56, visit our web site at www.ncar.org or contact the NCAR 56 Registration Desk at 937-426-2808 or by email at utc-mmg@utcdayton.com.

Co-Hosted By:

Air Force Research Laboratory

Wright Brothers Institute

Sponsored By:

Army Research Laboratory

Air Force Office of Scientific Research

Office of Naval Research

New Technology Week

www.ncar.org

AWARDS: Capt. Thomas E. Johnson

JOHNSON NAMED JUNIOR RESERVE OFFICER OF THE YEAR

Capt. Thomas E. Johnson's initiative, keen intellect and leadership skills were among several reasons the Air Force Office of Scientific Research (AFOSR) officer recently received the Air Force Junior Reserve Officer of the Year Award.

Johnson is the first reserve officer to develop, compete for and win funding for a Multi-University Research Initiative (MURI) grant, noted Col. Steven Reznick, the former AFOSR commander who nominated Johnson for the honor.

"His topic was selected by the Office of the Director, Defense Research and Engineering for funding up to $7.2 million over a five year period," Reznick said. "That's $2.2 million greater than the norm in this program."

Reznick also cited the leadership skills Johnson displayed at the Purdue University Calumet MURI kickoff meeting that was attended by Congressman Pete Visclosky. Not satisfied with success, Johnson continues to work with the Defense Advanced Research Projects Agency to secure an additional $400,000 for the MURI program.

Capt. Thomas E. Johnson

"Capt. Johnson's exceptional performance and tireless dedication in meeting the needs of this organization and the United States Air Force make him my unequivocal choice for this prestigious award," Reznick said.

Johnson has impressed others along the way. He was hand-picked to serve on the Continuing Education Committee for the Health Physics Society and rated as a top instructor for Health Physics Society and Industrial Hygiene Association continuing education classes. He also has been sought out by active duty personnel from the Army, Navy and Air Force for technical advice.

An innovator and trailblazer, Johnson is the first medical corps reservist to serve at AFOSR. He was also elected by peers to be the president of the local chapter of the Health Physics Society. He is the only faculty member that is an Equal Employment Opportunity Counselor at his University.

AWARDS: Dr. Gerald Witt

WITT FELLOW

Dr. Gerald Witt was elected by his peers to the prestigious status of Fellow in the American Physical Society recently.

Dr. Witt, an Air Force Office of Scientific Research's Physics and Electronics Directorate program manager, was honored for his exemplary leadership of national interdisciplinary research efforts in the fields of quantum-effect devices, low-temperature GaAs, optoelectronic measurement techniques, radiation effects, and defects in wide bandgap semiconductors.

The APS Fellowship Program was created to recognize members who may have made advances in knowledge through original research and publication or made significant and innovative contributions in the application of physics to science and technology. They may also have made significant contributions to the teaching of physics or service and participation in the activities of the Society. Each year, no more than one-half of one percent of the then current membership of the Society are recognized by their peers for election to the status of Fellow.

Such recognition by the APS of program managers is a recent development, Witt noted, and was only made possible within the last few years as a response to the formation of the Forum on Industrial and Applied Physics; under whose auspices Dr. Witt's nomination went forward.

Research Highlights

Air Force Office of Scientific Research
Technical Communications
875 N Randolph St.
Arlington, VA 22203-1954

Fax: (703) 696-5233
e-mail: info@afosr.af.mil

AFOSR would like to thank Drs. Robert Herklotz, Eugene Santos, Gernot Pomrenke, and Lt. Col. James Thorne for their assistance in making this issue possible.

Research Highlights is published every two months by the Air Force Office of Scientific Research. This newsletter provides brief descriptions of AFOSR basic research activities including topics such as research accomplishments, examples of technology transitions and technology transfer, notable peer recognition awards and honors, and other research program achievements. The purpose is to provide Air Force, DoD, government, industry and university communities with brief accounts to illustrate AFOSR support of the Air Force mission. *Research Highlights* is available on-line at:

http://www.afosr.af.mil

To access our website, click on the Research Products and Publications icon, then on *Research Highlights*.

Air Force Research Laboratory | AFRL
Science and Technology for Tomorrow's Air and Space Force

Air Force Office of Scientific Research
Technical Communications
875 N Randolph St.
Arlington, VA 22203-1954

To find out more about AFOSR *Research Highlights* past issues and featured articles, visit us at:

www.afosr.af.mil